alcons®

RR12

point-source array loudspeaker

user manual

evolutionary audio solutions™

Table of contents

1 Introduction 3
2 Important safety instructions and precautions 4
3 Installation 5
4 Rigging components 6
5 Array configurations 9
6 Service and support 19
7 CE declaration of conformity 21

1. Introduction

Dear customer,

Congratulations on your purchase of an Alcons Audio RR12 point-source array loudspeaker and thank you for your confidence in Alcons products. We are very honoured to welcome you to the growing family of Alcons ambassadors!

For your safety, please read the Important safety instructions and the precautions section before rigging a loudspeaker array.

General features

The RR12 has the following features:
A unique seamless arrayability up to/beyond 20kHz.
A-symmetric patented 60° dispersion in the non-coupling plane
1:1 non-compressed sound reproduction, with up to 90% less distortion
Pro-ribbon HF driver with exceptional intelligibility and 1:16 dynamic output
Very high acoustical power output with wide frequency response
SIS™ pre-wired for very high damping and further reduced distortion
All Neodymium drivers for excellent performance-to-weight ratio

RR12 rigging features

The trapezoidal cabinet is fitted with integrated mounting hardware, enabling array assembly with just a single operation from the rear of the cabinet.
Tight-packing the RR12 in horizontal or vertical arrays for stacked or flown applications, dispersion patterns are formable in increments of 30°; 60°, 90°, 120°...360° in the coupling plane, by asymmetric 60° (+20°/-40°) in the non-coupling plane.

2. Important safety instructions and precautions

Read this manual

1. Follow all safety instructions as well as the warning messages
2. Never incorporate equipment or accessories not approved by Alcons Audio
3. Read all the related product information before using the system
4. Work with qualified personnel for rigging the system.
5. Installation should only be carried out by qualified personnel who are familiar with the rigging techniques and safety recommendations stated in this manual.
6. Ensure health and safety during installation and setup
7. All persons must wear protective headgear and footwear at all times. Under no circumstances personnel is allowed to climb onto a loudspeaker assembly.
8. Respect the Working Load Limit (WLL) of third party equipment
9. Alcons Audio is not responsible for any rigging equipment and accessories provided by third party manufacturers. Verify that the Working Load Limit (WLL) of the suspension points, chain hoists and all additional hardware rigging accessories is respected.
10. Respect the maximum configurations and the recommended safety level
11. For safety issue, respect the maximum configurations outlined in this manual. To check the conformity of any configuration in regards with the safety level recommended by Alcons Audio
12. Be cautious when flying a loudspeaker array. Always verify that no one is standing underneath the loudspeaker array when it is being raised. As the array is being raised, check each individual element to make sure that it is securely fastened to the adjacent element.
13. Never leave the array unattended during the installation process. As a general rule Alcons Audio recommends the use of safety slings at all times.
14. Be cautious when ground-stacking a loudspeaker array
15. Do not stack the loudspeaker array on unstable ground or surface. If the array is stacked on a structure, platform, or stage, always check that the latter can support the total weight of the array. As a general rule, Alcons Audio recommends the use of safety straps at all times.
16. Take into account the wind effects on dynamic load
17. When a loudspeaker assembly is deployed in an open air environment, wind can produce dynamic stress to the rigging components and suspension points. If the wind force exceeds 6 Beaufort scale, lower down and/or secure the loudspeaker array

The exclamation point within a triangle is intended to alert the user to the presence of important operating instructions in the literature accompanying the product.

3. Installation

Unpacking

Carefully open the shipping carton and inspect all the parts. Every Alcons product is thoroughly tested and inspected before leaving the factory and should arrive in perfect condition. If you find any damage, notify the shipping company immediately. Only you, the consignee, may initiate a claim for shipping damage. Be sure to save all packing materials for the carrier's inspection.

4. Rigging components

RR12 loudspeaker

1) Coupling bar	Sliding device which makes a connection between the cabinets
2) Coupling bar pin	Locking pin secures the “locked”position of the coupling bar
3) GRD12 mounting	M8 mounting holes
4) Bar handle	Handles are located in the non-coupling sides of the cabinet
5) Allignment strip	these strips ensure an aligned cabinet coupling

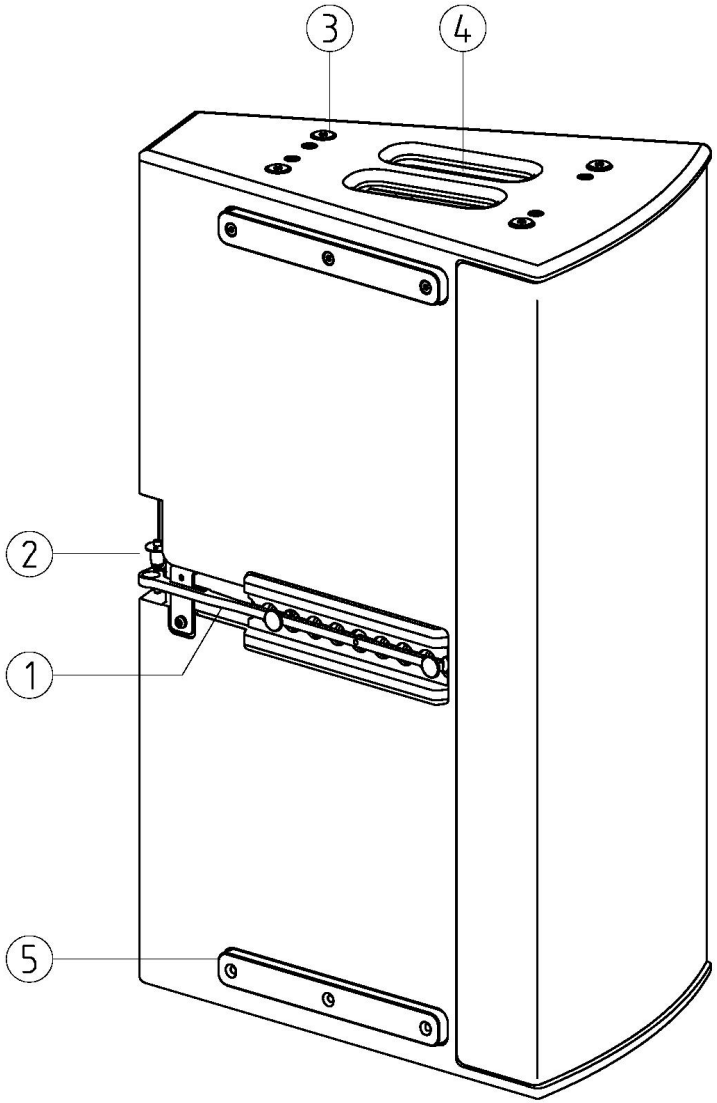

4. Rigging components

GRDRR12HOR

This grid is used to suspend a horizontal cabinet array. It features 4 threaded hand knobs with “anti-loose” fixing rings. The GRDRR12HOR features 14mm/0,55-in holes, facilitating a 1,5T shackle.
The GRDRR12HOR is certified for a safety-rating of 10:1, for three (3) cabinets RR12 and has a weight of 2,2 kg / 4.9 lb.

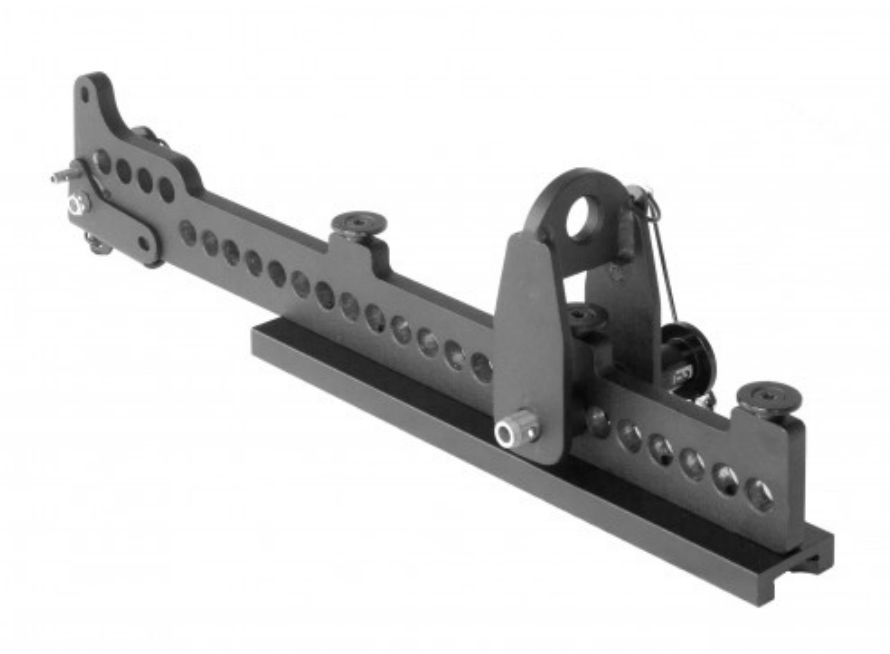

GRDRR12VER

This grid is used to suspend a vertical cabinet array. It can be mounted on both sides of the array to make left/right configurations. The detachable hoist eye features a 14mm/0,55-in hole, facilitating a 1,5T shackle.
The GRDRR12VER is certified for a safety-rating of 10:1, for four (4) cabinets RR12 and has a weight of 1,1 kg / 2.4 lb.

4. Rigging components

RR12HSTBR

This spreader bar is used to carry the load of two GRDRR12HOR's into one pick up point. The hole pattern facilitates 1x 2T and 4x 0,75T shackles. The RR12HSTBR is certified for a safety-rating of 10:1, for five (5) cabinets RR12 and has a weight of 2,7 kg / 6.0 lb.

PNCLMP

The PNCLMP can be used to suspend a RR12 array from a single point. The PNCLMP is attached with the Quick Release pin to a GRDRR12HOR or RR12HSTBR pickpoint. The load can be attached to an overhead Truss or bar with a tube diameter of 51mm (2"). It can be horizontally adjusted and fixed. The PNCLMP is certified for a safety-rating of 10:1, for a Working Load Limit of 200 kg and has a weight of 0,9 kg / 2.0 lb.

BRKRR12HOR

U-bracket for 1x RR12, in horizontal position. Tilt angle can be adjusted.
The BRKRR12HOR is certified for a safety-rating of 10:1, for one cabinet RR12 and has a weight of 7,6 kg / 16.8 lb.

5. Array configurations

Cabinet connection

Two or more RR12 cabinets can be coupled together using the coupling bar and locking pin. Use a flat surface for this operation
The coupling bar has to positions; open and closed.
For the open position pull out the locking pin and slide the coupling bar backwards.

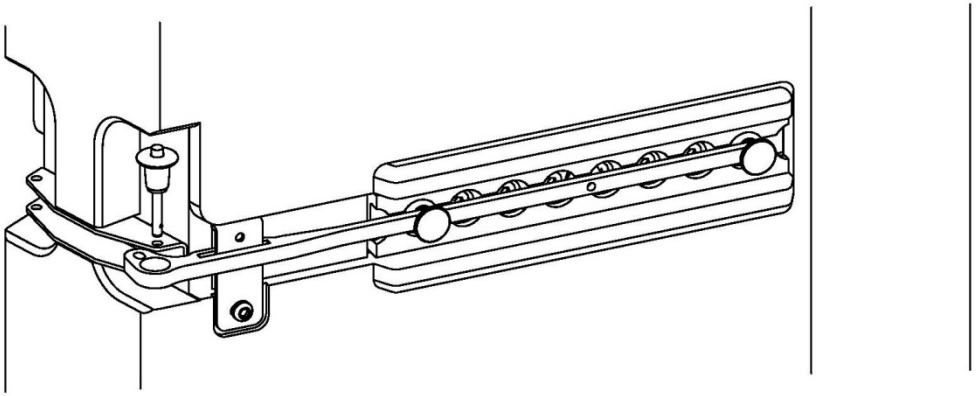

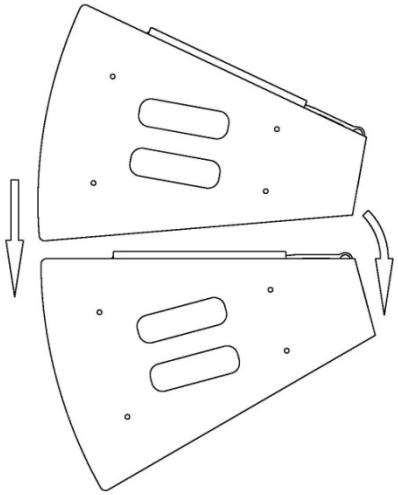

Place another cabinet with the rail side against the side with the coupling bar. Let the front side cabinet corners touch and then angle to the other cabinet. Slide the coupling bar inwards and lock with the locking pin.

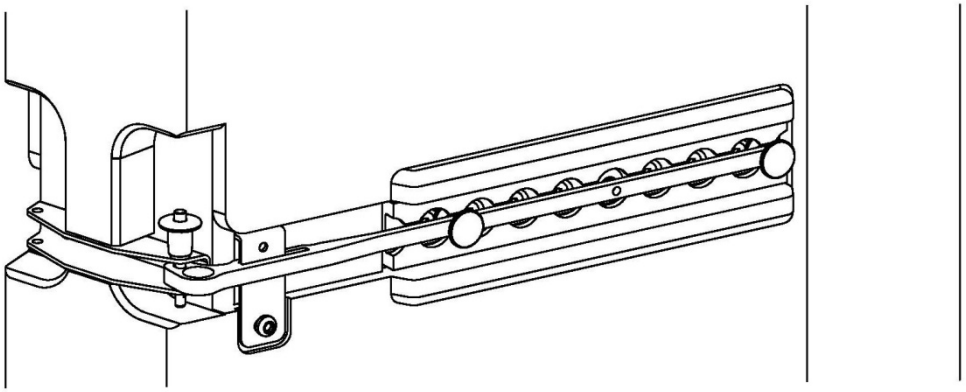

5. Array configurations

Ground stacking

A RR12 loudspeaker array can be stacked onto sub/ bass cabinets, stage or other features. Ensure that it is an even and flat surface.
Make the cabinet connections on a stable and flat surface. Ensure that the workplace is safe and has enough room to make the connections
The array has to be supported along its entire underside. Plastic feet are mounted on each RR12 cabinet to prevent scratching.

Alcons Audio recommends the use of safety straps at all times, when ground stacking.

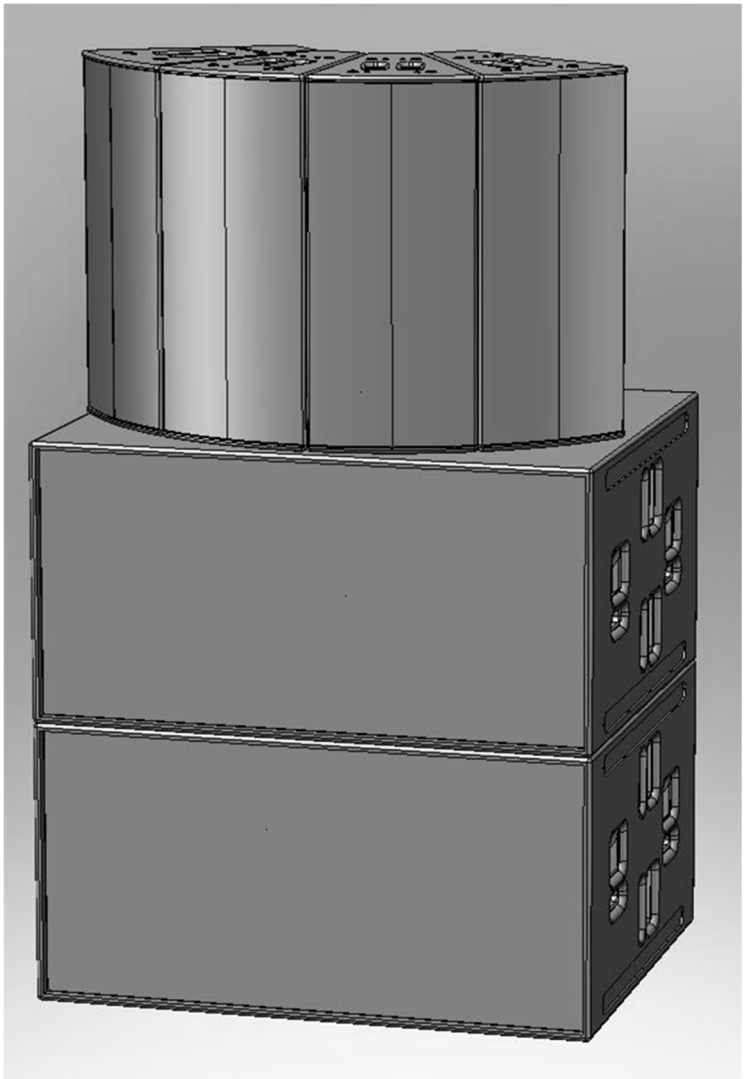

The picture on the right shows a horizontal array of 4 RR12's stacked on two BC543 cardioid subwoofers.

5. Array configurations

GRDRR12HOR mounting

The GRDRR12HOR can be mounted on the hole patterns of one or two RR12 cabinets combined. It also acts as an extra cabinet connection.
The safe WLL load of one GRDRR12HOR consists of three RR12 cabinets.
When screwing the treaded head knobs, do this in a crosswise manner. When it takes to much effort to screw, unscrew and inspect the tread.
Keep alle treads in good working order. A little lubrication is allowed.
In a fixed installation it is also possible to use hexagonal or cylindrical headed M8x30 bolts with a 8.8 strength class. Use locking washers!

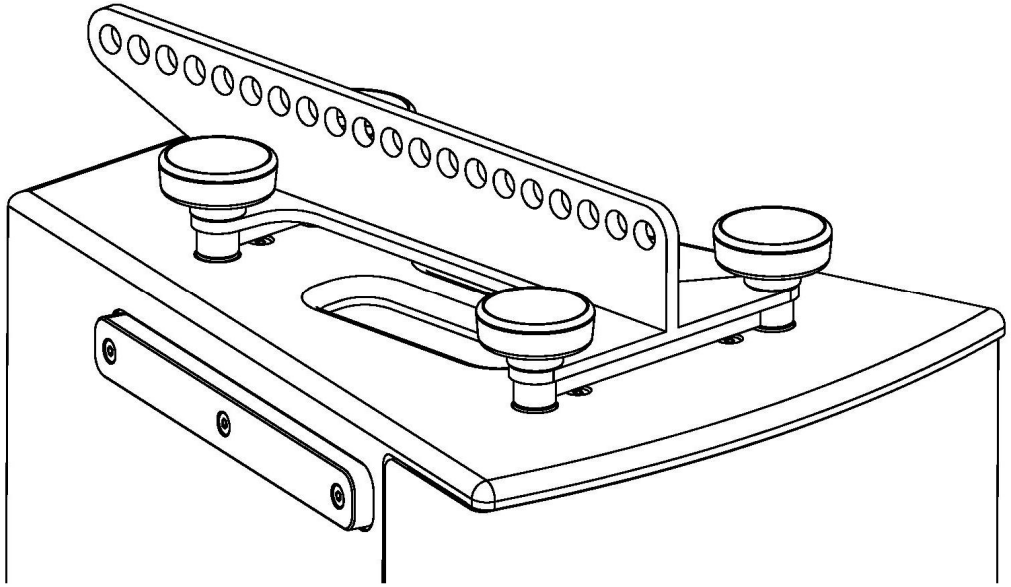

5. Array configurations

Flying a horizontal array

A RR12 loudspeaker array can be flown horizontally using using the GRDRR12HOR. The following configurations are allowed (left to right):

6x RR12 + 2x GRDRR12HOR; 5x RR12 + 2x GRDRR12HOR; 4x RR12 + 2x GRDRR12HOR; 3x RR12 + GRDRR12HOR ; 2x RR12 + GRDRR12HOR and RR12 + GRDRR12HOR

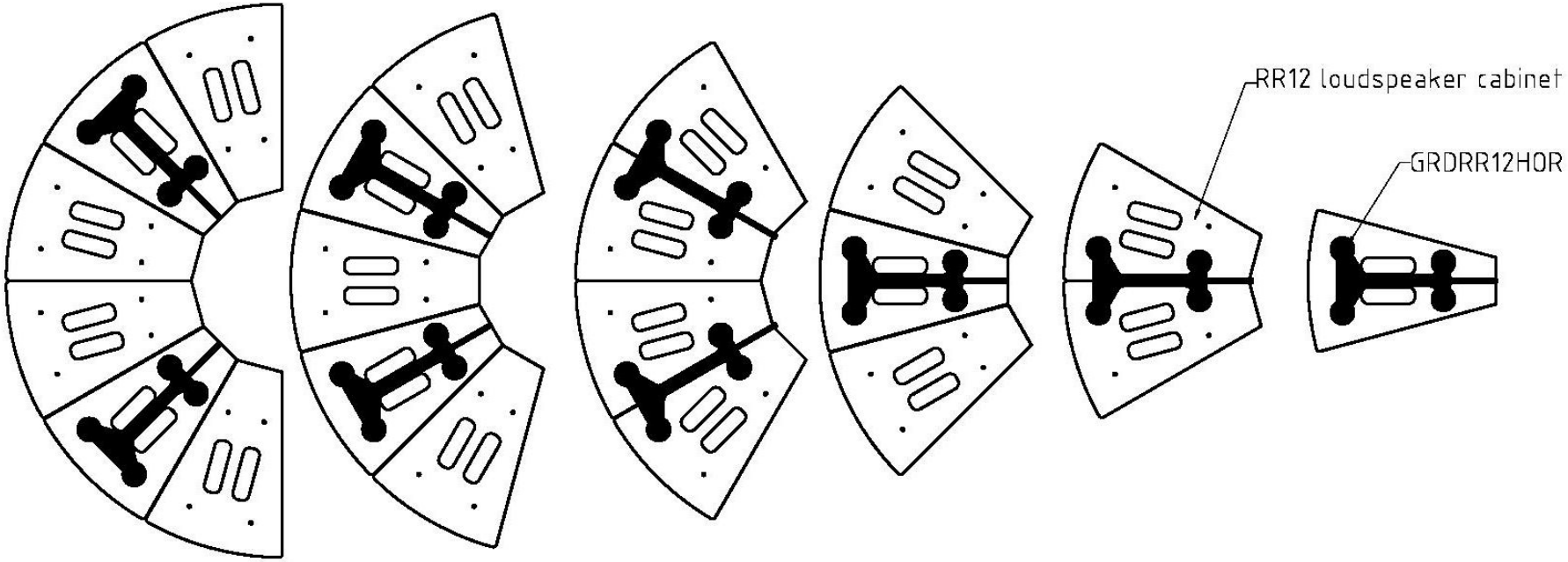

When flying an array with two GRDRR12HOR grids, you can use two pick points for each grid. When only one hoist point is available use the RR12HSTBR load spreading bar (5x RR12 max). Use two hoist points with the 6x RR12 + 2x GRDRR12HOR configuration.

No bridled suspension chain is allowed with 2x GRDRR12HOR

5. Array configurations

RR12HSTBR

Use the RR12HSTBR to connect two GRDRR12HOR to one hoist point. Under no circumstances is a bridled suspension chain allowed.
Use the ARC simulation program to determine the correct tilt angle. Use the angle tilt angle references chart and align the stated holes of both GRDRR12HOR with two matching holes in the RR12HSTBR.This connection can be made using two 0,75t shackles per side. Use a 2T shackle for the single hoist point.

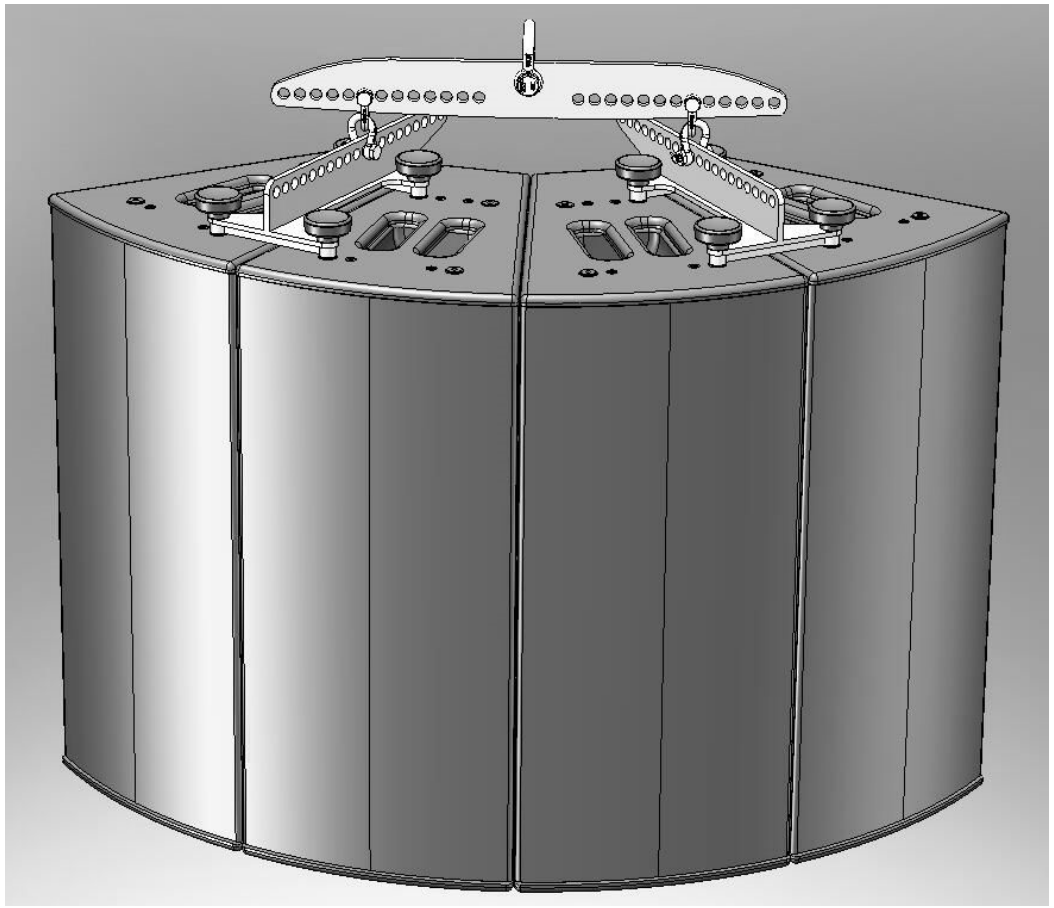

The picture on the right shows a horizontal array of 4 RR12's with two GRDRR12 grids and one RR12HSTBR

5. Array configurations

Tilt angle references chart GRDRR12/ RR12HSTBR

According to the horizontal configurations 1x RR12 – 4x RR12
When using the RR12HSTBR, use the stated holes on both GRDRR12 grids and align them with the holes in the RR12HSTBR.

HOR	1	2	3	4	5	6	7	8	9	10	11	12	13	14	15	16	17	18	19	20
1 x RR12	14,8°	12,2°	9,7°	7,1°	4,4°	1,6°	1°	-3,6°	-6,3°	-8,8°	-11,4°	-13,8°	-16,5°	-18,8°	-21,3°	-23,5°	-25,6°	-27,3°	-29,9°	-31,8°
2 x RR12	16,3°	13,6°	11,2°	8,7°	6,1°	3,6°	1°	-1,6°	-4,2°	-6,7°	-9,5°	-11,8°	-14°	-16,6°	-19°	-21,5°	-23,5°	-25,5°	-27,6°	-30°
3 x RR12	19,1°	16,8°	14,4°	12°	9,5°	7,1°	4,5°	1,9°	-0,7°	-3,2°	-5,8°	-8,3°	-10,8°	-13,2°	-15,8°	-18,2°	-20,3°	-22,5°	-24,6°	-26,8°
4 x RR12	13,9°	11,8°	9,7°	7,4°	5,3°	3,2°	1,1°	-1,4°	-3,3°	-5,7°	-7,8°	-10,1°	-11,9°	-14,1°	-16,2°	-18,3°	-20,2°	-22,2°	-24°	-25,8°

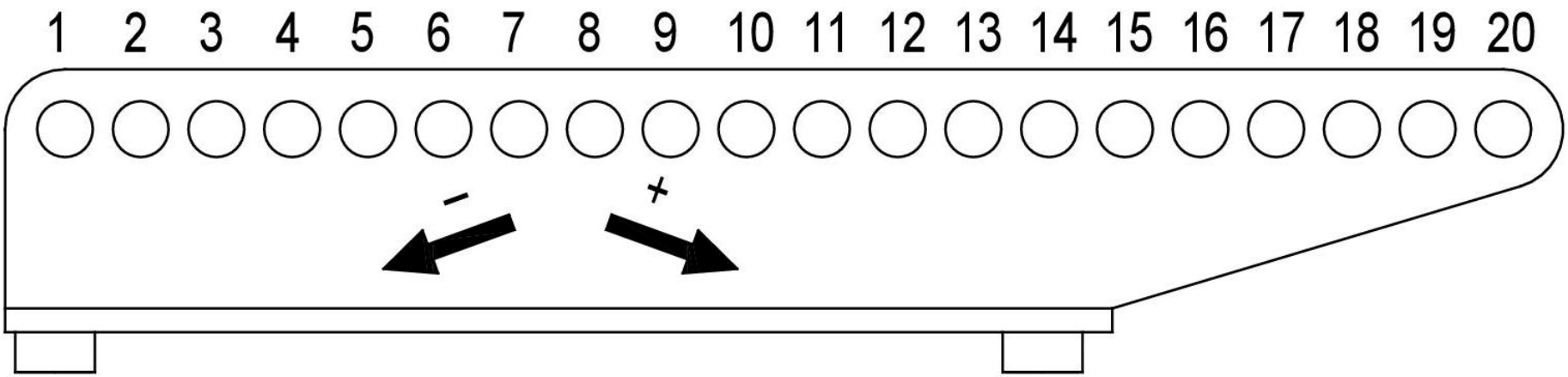

5. Array configurations

Flying a vertical array

A RR12 loudspeaker array can be flown vertically using the GRDRR12VER. This grid enables building “ribbon left” or “ribbon right” configurations.

GRDRR12VER elements

Ribbon left configuration shown

1) Hoist bracket
2) Coupler bar connection
3) Coupler bar connection pin
4) Hoist bracket pin
5) grid track
6) grid stud

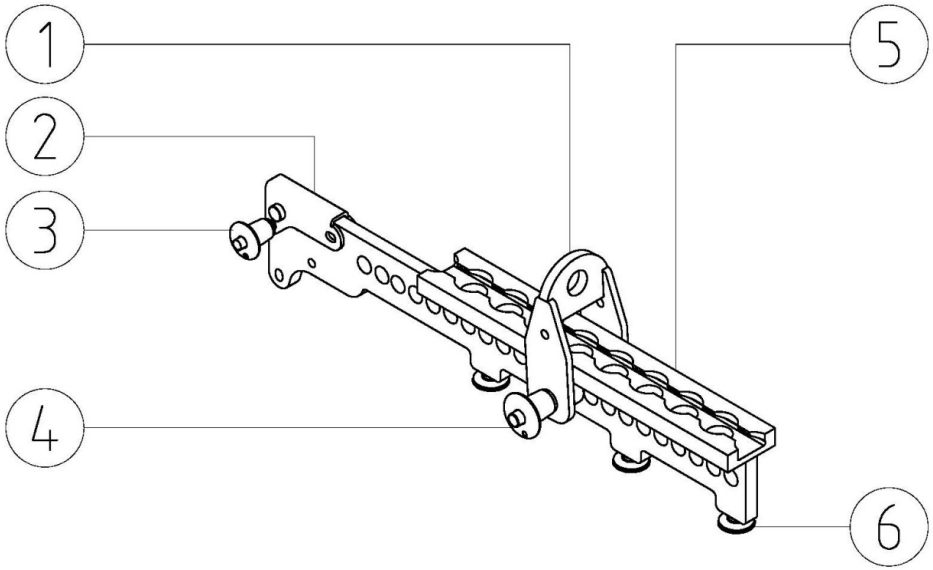

In order to make a ribbon left or right configuration, positions (1) and (2) have to be adjusted. The ribbon left configuration has the grid studs (6) facing downwards and the hoist bracket (1) in the upright position. The coupler bar connection (2) is in the closed position as shown. The pin (3) is used to lock the grid to the RR12 mounting. With the ribbon right configuration, the hoist bracket (1) is in the downwards position and the coupler bar connection(2) is in the open position, with the pin (3) locking this position. In essence, the chosen mounting side of the RR12, dictates the GRDRR12VER configuration.
The hoist bracket can be adjusted on the coupler bar to give a desired array tilt angle.

5. Array configurations

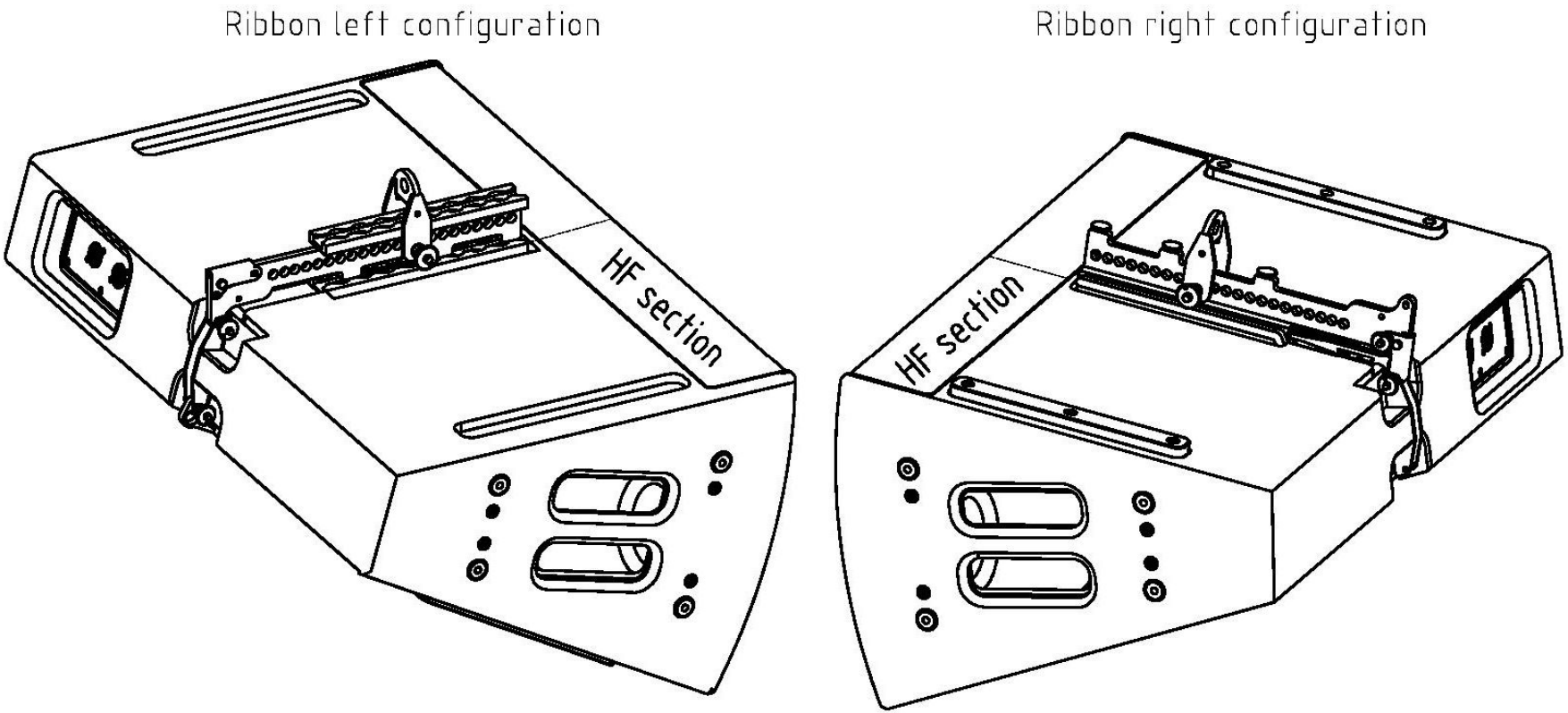

The picture on this page shows how the GRDRR12VER is mounted for the required RR12 mounting side, in ribbon left- or right array configuration.
The HF section is always situated under the GRDRR12HOR hole pattern. This is, by default, the topside of the cabinet. The ribbon right configuration shows that the coupler bar connection is locked together with the connection bar by the locking pin attached to the RR12.

Due to mechanical restrictions, the Centre Of Gravity is slightly off centre to the coupler bar. The cabinet/ array vertical alignment will therefore skew to the HF section. This can be overcome by attaching and tensioning a (safety) cord between the HF side handle bars, or an M8 eyebolt screwed into the GRDRR12HOR hole pattern and the hoist pick-up point.

Use a second GRDRR12VER with 4 RR12's, or in array pull back situations.

5. Array configurations

The picture on the right shows a vertical array of 3 RR12's in the ribbon right configuration.

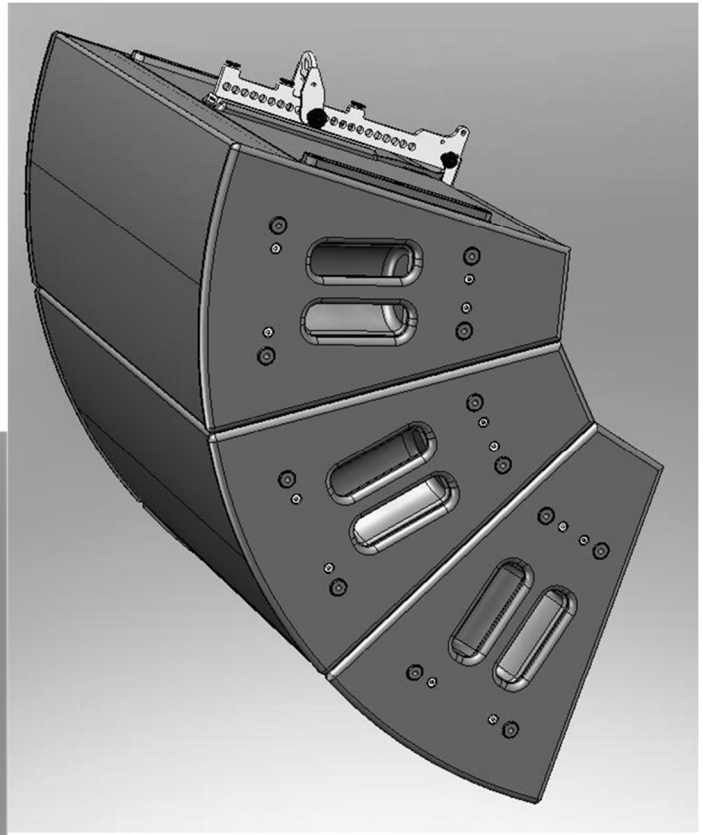

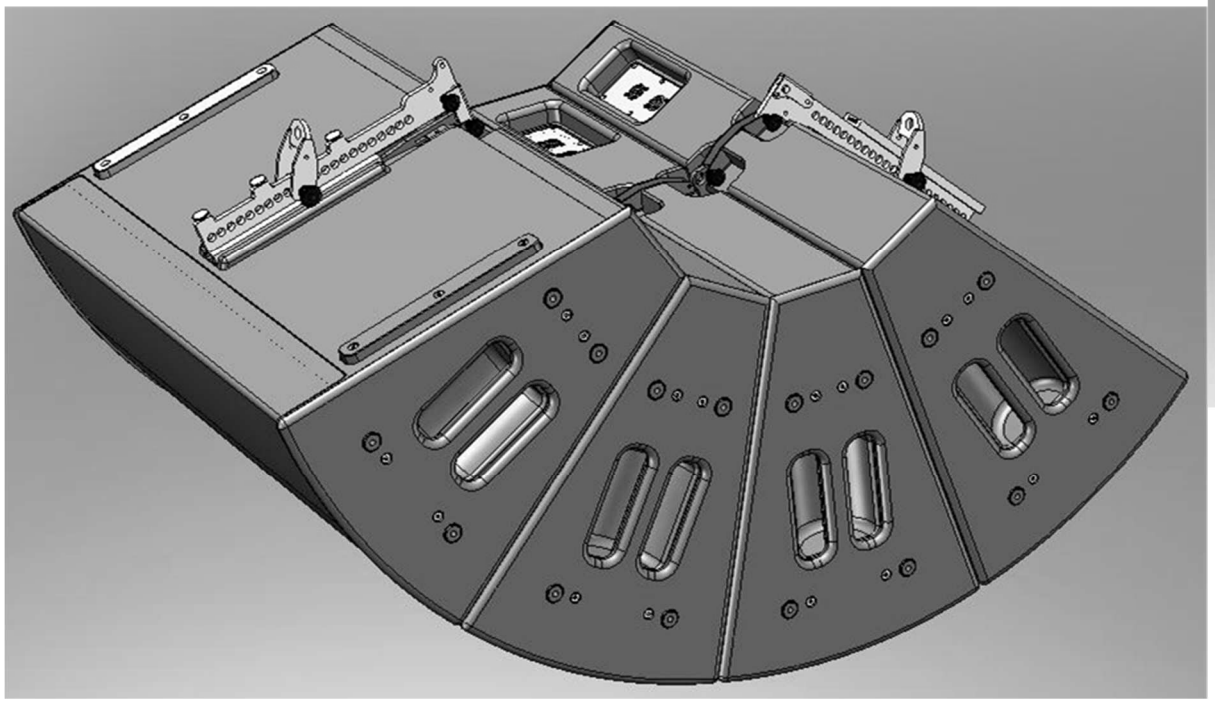

The picture on the left shows an array of 4 RR12's, with a second GRDRR12VER in a pull-back situation. The array has a ribbon right configuration.

5. Array configurations

Tilt angle references chart GRDRR12VER

According to the vertical configurations 1x RR12 – 3x RR12

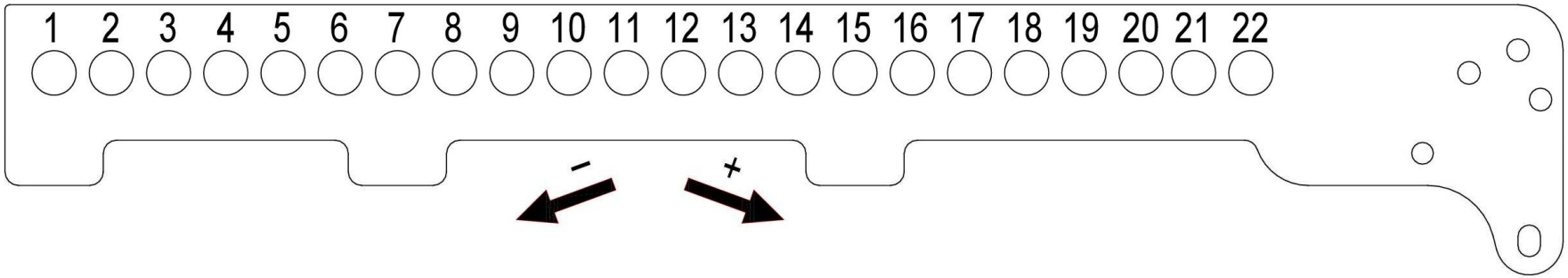

VER	1	2	3	4	5	6	7	8	9	10	11	12	13	14	15	16	17	18	19	20	21	22
1 x RR12	33°	29°	23,5°	19°	17°	10°	5°	1°	-4°	-9°	-13°	-19°	-23°	-27°	-31°	-34,5°	-37°	-41°	-44°	-46,5°	-48°	-50°
2 x RR12	31°	29°	26,5°	24°	22°	18°	16°	13°	10°	7°	4°	1,5°	-1,5°	-4°	-7,5°	-10,5°	-13°	-16°	-19°	-21°	-23°	-25°
3 x RR12	35°	34°	32,5°	31°	29°	27,5°	26°	24,5°	23°	21°	19°	17°	15°	13°	11°	9,5°	7,5°	5°	3°	1°	-0,5°	-3°

6. Service and support

Warranty

Summary

Alcons Audio BV warrants the original purchaser and any subsequent owner of each new Alcons product, for a period of six years limited from the date of the original purchase by the original purchaser that the new Alcons product is free of defects in materials and workmanship. Alcons Audio BV warrants the new Alcons product regardless of the reason for failure, except as excluded in this warranty. In order to obtain warranty, you must keep the original sales receipt to establish the exact date of purchase.

Items excluded from warranty

Warranty does not cover any product which has been damaged because of any misuse, accident, or negligence. Warranty also does not extend to a new Alcons product if the serial number has been defaced, altered or removed.

What we will do

Alcons Audio BV will replace defective parts and repair malfunctioning products, regardless of the reason for failure (except as excluded). Warranty work can only be performed at our authorized service centres, or at our factory.

Disclaimer

Alcons Audio BV is not liable for any damage to loudspeakers, amplifiers, or any other equipment that is caused by negligence, misuse or improper installation. Alcons Audio BV is not liable for any incidental damages resulting from any defect in the new Alcons product. This includes any damage to another product or products resulting from such a defect.

Alcons Audio BV reserves the right to change specifications without notice.

6. Service and support

Contact information

Mailing address:

Alcons Audio BV
De Corantijn 10
1689 AP ZWAAG
The Netherlands

Telephone:

Telephone: +31 (0)229 283090

World Wide Web:

http://www.alconsaudio.com

E-mail:

info@alconsaudio.com

7. EC declaration of conformity

Alcons Audio BV
De Corantijn 10
1689 AP ZWAAG
The Netherlands

States that the following products:
RR12 Rigging System

are in conformity with the provisions of the following EC directives and applicable amendments:

Machinery 2006/42/EC

and the national laws to enforce this directive,

provided the mounting components are unaltered/modified and in “factory-original” condition.

Established at Zwaag, the Netherlands,
December 1, 2022

T.H. Back
Managing Director

Notes